PHILIPS

CD Soundmachine

TAZ2000B
TAZ2000S

User manual

Register your product and get support at:
www.philips.com/support

Contents

1 Important 3
Safety 3
Notice 3
Trademarks 3

2 Your CD soundmachine 4
What's in the box 4
Overview of the main unit 4

3 Get started 5
Connect power 5
Turn on/Standby 5

4 Play from CD 5
Play a CD 5
Program tracks 5

5 Listen to the radio 6
Listen to FM radio 6

6 Play from Bluetooth® 6
Play from classic Bluetooth 6

7 Play from USB 7
Program tracks 7

8 Listen to an external device 7

9 Other features 8
Set the sleep timer
Factory reset

10 Product specification 8

11 Troubleshooting 9

1 Important

Safety

Read and understand all instructions before you use this CD soundmachine system.
If damage is caused by failure to follow the instructions, the warranty does not apply.

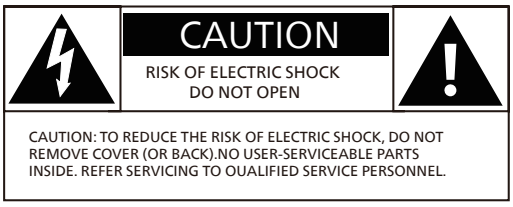

This 'bolt of lightning' indicates uninsulated material within the device may cause an electrical shock. For the safety of everyone in your household, please do not remove the covering.
The 'exclamation mark' calls attention to features for which you should read the enclosed literature closely to problems.
WARNING: To reduce the risk of fire or electric shock, the device should not be exposed to rain or moisture and objects flled with liquids, such as vases, should not be placed on the device.
CAUTION: To prevent electric shock fully insert the plug. (For regions with polarized plugs: To prevent electric shock, match wide blade to wide slot.)

Warning

- Never remove the casing of this apparatus.
- Never lubricate any part of this apparatus.
- Never look into the laser beam inside this apparatus.
- Never place this apparatus on other electrical equipment.
- Keep this apparatus away from direct sunlight, naked flames or heat.
- Ensure that you always have easy access to the power cord, plug or adaptor to disconnect the apparatus from the power.

- Make sure that there is enough free space around the product for ventilation.
- Only use attachments/accessories specifed by the manufacturer.
- Battery usage CAUTION -to prevent battery leakage which may result in bodily injury, property damage, or damage to the product:
  - Install the battery correctly, + and - as marked on the product.
  - The battery (packed or installed) shall not be exposed to excessive heat such as sunshine, fire or the like.
  - Remove the battery when the product is not used for a long time.
- The product shall not be exposed to dripping or splashing.
- Do no place any source of danger on the product (e.g. liquid filled objects. lit candles).
- Where the MAlNS plug or an appliance coupler is used as the disconnect device, the disconnect device shall remain readily operable.
- Please use the product safely in an environment with temperature between 0°C and 40°C.

Notice

Any changes or modifcations made to this device that are not expressly approved by MMD Hong Kong Holding Limited may void the user's authority to operate the equipment.

Compliance

Hereby, TP Vision Europe B.V. declares that this product is in compliance with the essential requirements and other relevant provisions of Directive 2014/53/EU and UK Radio Equipment Regulations SI 2017 No 1206. You can find the Declaration of Conformity on www.philips.com/support.

Care of the environment

Disposal of your old product and battery

Your product is designed and manufactured with high quality materials and components, which can be recycled and reused.

This symbol on a product means that the product is covered by European Directive 2012/19/EU.

This symbol means that the product contains batteries covered by European Regulation (EU) 2023/1542 which cannot be disposed of with normal household waste.

Inform yourself about the local separate collection system for electrical and electronic products and batteries. Follow local rules and never dispose of the product and batteries with normal household waste. Correct disposal of old products and batteries helps prevent negative consequences for the environment and human health.

Removing the disposable batteries
To remove the disposable batteries, see battery installation section.

Environmental information
All unnecessary packaging has been omitted. Your system consists of materials which can be recycled and reused if disassembled by a specialized company. Please observe the local regulations regarding the disposal of packaging materials, exhausted batteries and old equipment.

Care for your product

- Do not insert any objects other than discs into the disc compartment.
- Do not insert warped or cracked discs into the disc compartment.
- Remove the discs from the disc compartment if you are not using the product for an extended period of time.
- Only use microfiber cloth to clean the product.

This apparatus includes this label:

Note

- The type plate is located on the back of the product.

Trademarks

Bluetooth®

The Bluetooth® word mark and logos are registered trademarks owned by Bluetooth SIG, Inc. and any use of such marks by MMD Hong Kong Holding Limited is under license.

Be responsible
Respect copyrights

The making of unauthorized copies of copy-protected material, including computer programs, flies, broadcasts and sound recordings, may be an infringement of copyrights and constitute a criminal offence. This equipment should not be used for such purposes.

2 Your CD soundmachine

Congratulations on your purchase, and welcome to Philips! To fully benefit from the support that Philips offers, register your product at www.philips.com/support.

Introduction

With this CD soundmachine, you can:

- Listen to FM radio;
- Enjoy audio from discs, Bluetooth, and other external audio devices;

What's in the box

Check and identify the contents of your package:

- Main unit ×1
- Power cords ×2
- Quick Start Guide ×1
- Safety sheet ×1
- Warranty card ×1

Main unit

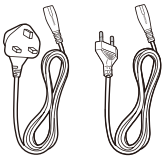

Power cords

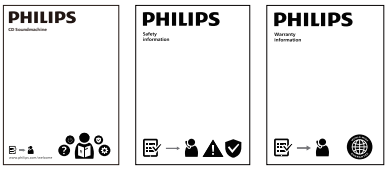

Quick Start Guide / Safety sheet / Warranty card

- Power cord quantity and plug type vary by regions.
- Images, illustrations and drawings shown on this user manual are for reference only, actual product may vary in appearance.

Overview of the main unit

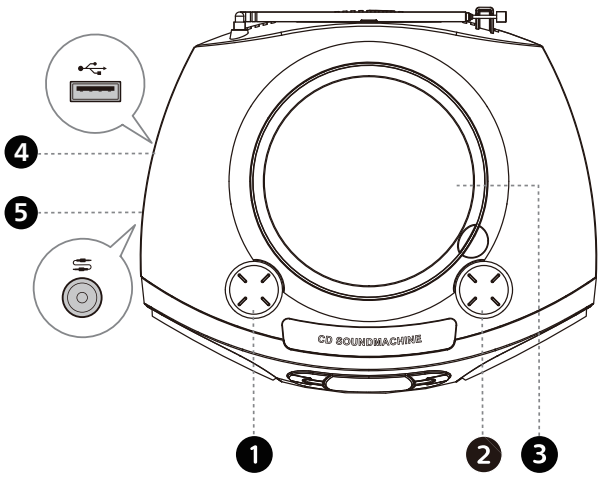

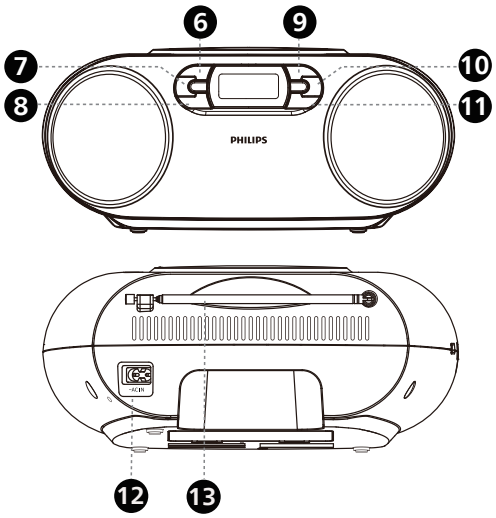

① ⏮ / ⏭
- Tune to an FM radio station in radio source, fine tune (increase /descrease) frequency.
- InCD/USB/BT mode, play the previous or next track.
- In CD/USB mode, long press to fast forward or fast backward.

■
- Stop the play.

▶II
- Start and pause play.

② – / +
- Decrease / Increase the volume.

▲ / ▼
- In USB mode, switch to the previous or next album.
- In the FM mode, switch to the previous/next preset radio station.

③ **Disc tray**
- Disc compartment.

④
- USB port.

⑤
- Audio-in socket.

⑥
- Turn on or to standby.

⑦ **MODE**
- In FM mode, toggle Stereo/Mono.
- In CD/USB mode, switch between playback modes: REP ONE, REP ALL, SHUF ON and OFF.

⑧ **PROG/PRESET**
- Program tracks or preset radio station.

⑨
- Press to select source.

⑩ **DBB**
- Turn Dynamic Bass Boost on/off.

⑪ **SLEEP**
- Set sleep timer.

⑫ **AC IN**
- Insert power cable plug to AC IN socket.

⑬ **Antenna**
- FM antenna.

3 Get started

Caution

- Use of controls or adjustments or performance of procedures other than herein may result in hazardous radiation exposure or other unsafe operation.

Always follow the instructions in this chapter in sequence.

Connect power

The unit can be powered by either AC power or batteries.

Option 1 : AC power

Warning

- Risk of product damage! Make sure that the power supply voltage corresponds to the voltage printed on the back or the underside of the unit.
- Risk of electric shock! When you disconnect the AC power, always pull the plug from the socket. Never pull the cord.

Connect the AC power cord to the wall socket.

Note

- To save energy, turn the unit off after use.

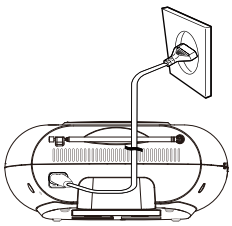

Option 2: Battery power

Caution

- Batteries contain chemical substances, so they should be disposed of properly.

1 Open the battery compartment at the bottom of the unit.
2 Insert 6 batteries (type: 1.5V R14/UM2/C CELL) with correct polarity (+/-) as indicated.
3 Close the battery compartment.

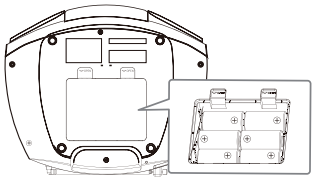

Note

- The batteries are not supplied. Please purchase seperately.

Turn on/Standby

Press the ⏻ button on the unit to turn on and switch to last source, press it again to turn off.

Switch to standby mode

- The product switches to standby mode automatically when there is no audio detected for over 15 minutes.
- Press ⏻ button to wake up the product from standby mode.

4 Play from CD

Play a CD

Note

- You cannot play CDs encoded with copyright protection technologies.

You can play commercially available audio CDs:

- CD-Recordables (CD-R)
- CD-Rewritables (CD-RW)

1 Press ⟲ to select CD source.
↳ **Cd** displays on the screen.
2 Open the CD compartment.
3 Insert a CD with the printed side facing up and close the CD lid gently.
↳ Your CD soundmachine starts to play automatically.
- To select a track, press ⏮ / ⏭ .
- To fast backward/foward, press and hold ⏮ / ⏭.
- To pause CD play, press ▶II .
- To resume CD play, press ▶II again.
- To stop CD play, press ■ .

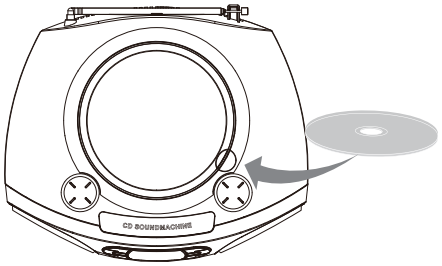

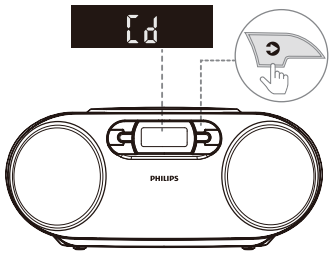

Program tracks

In CD mode, you can program a maximum of 20 tracks in CD disc.

1 Press ■ to stop playback.
2 Press **PROG** to activate the program mode.
↳ **[P01 01]** displays on the screen.
3 Press ⏮ / ⏭ to select a track number, then press **PROG** to confirm.
4 Repeat Step 3 to program more tracks.
5 Press ▶II to play the programmed tracks.
↳ During play, **PROG** (program) is displayed.
- To erase the program, press ■ twice.

Note

- Press the ■ button to exit the program mode in program status. When the number of program tracks reaches 20, a **FULL** message will be displayed.

5 Listen to the radio

Note

- Position the antenna as far as possible from TV, or other radiation source.
- For optimal reception, fully extend and adjust the position of the antenna.

Listen to FM radio

Tune to an FM radio station

1 Press to select FM source.

2 Press and hold ⏮ / ⏭ for three seconds.
↳ The radio tunes to a station with strong reception automatically.

3 Repeat Step 2 to tune to more stations.

To tune to a radio station with weak signal:

Press ⏮ / ⏭ repeatedly until you find optimal reception.

Store FM radio stations automatically

Note

- You can store a maximum of 20 FM radio stations.

1 Press to select FM source.

2 Press and hold **PROG/PRESET** for three seconds.
↳ All available radio stations are stored automatically, then the first stored radio station is broadcast when 20 preset radio radio stations are stored.

Store FM radio stations manually

1 Press to select FM source.

2 Press **PROG/PRESET** to activate program mode.
↳ **[P01]** is displayed.

3 Press ▲ / ▼ to allocate a number from 1-20 to this radio station, and then press **PROG/PRESET** to confirm.

4 Repeat steps 1-3 to program more stations.

Note

- To overwrite a programmed station, store another station in its place.

Select a preset FM radio station

In FM mode, press ▲ / ▼ to select a preset number.

- When listening to FM radio, you can press the MODE button to switch between stereo and mono modes.

6 Play from Bluetooth

Play from classic Bluetooth

Note

- Compatibility with all Bluetooth devices is not guaranteed.
- Any obstacle between the unit and the device can reduce the operational range.
- The effective operation range between this unit and your Bluetooth enabled device is approximately 10 meters (30 feet).
- The unit can memorize up to 8 previously connected Bluetooth devices.

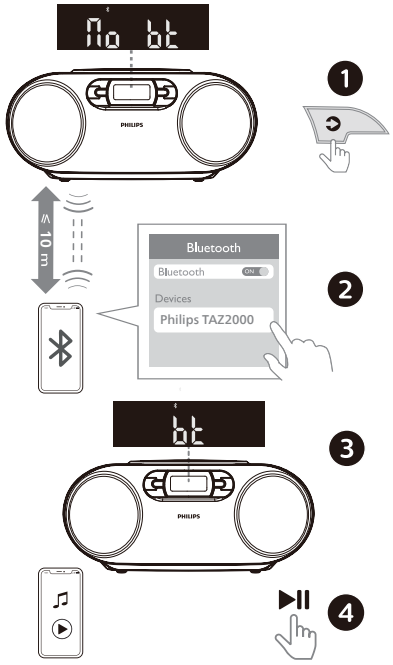

1 Press to select the Bluetooth source.
↳ **[No bt]** (Bluetooth) is displayed.

2 On your device that supports Advanced Audio Distribution Profile (A2DP), enable Bluetooth and search for Bluetooth devices that can be paired (refer to the user manual of the device). Select '**Philips TAZ2000**' on your Bluetooth enabled device.

3 After successful pairing and connection, **[bt]** is displayed and you will hear the prompt sound from the unit.

4 Play audio on the connected device.
↳ Audio streams from your Bluetooth enabled device to this product.

To disconnect the Bluetooth-enabled device:

- Deactivate Bluetooth on your device.
- Press and hold on the product for 3 seconds to enter pairing mode.

7 Play from USB

Note

- Make sure that the USB device contains playable audio content.
- Support FAT16/FAT32/exFAT file format. Support ≤128G.

1 Press to select the USB source.

2 Insert a USB device into the socket.

3 Play starts automatically. If not , press ▶II .
- To select a track, press I◀◀ / ▶▶I .
- To fast backward/foward, press and hold I◀◀ / ▶▶I .
- To pause USB play, press ▶II .
- To resume USB play, press ▶II again.
- To stop USB play, press ■ .

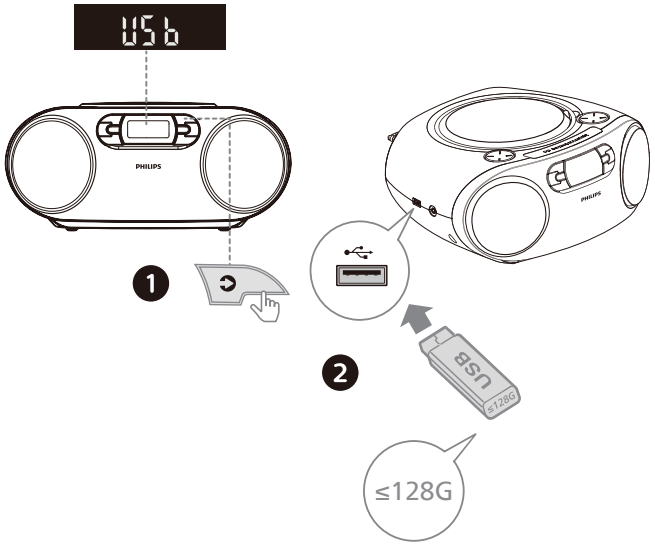

Program tracks

In USB mode, you can program a maximum of 20 tracks in USB.

1 Press ■ to stop playback.

2 Press **PROG** to activate the program mode.
↳ **[P01 01]** displays on the screen.

3 Press I◀◀ / ▶▶I to select a track number, then press **PROG** to confirm.

4 Repeat Step 3 to program more tracks.

5 Press ▶II to play the programmed tracks.
↳ During play, **PROG** (program) is displayed.
- To erase the program, press ■ twice.

Note

- Press the ■ button to exit the program mode in program status. When the number of program tracks reaches 20, a **FULL** message will be displayed.

8 Listen to an external device

You can listen to an external device through this unit with an audio cable.

1 Press to select AUDIO IN source.

2 Connect the audio cable (3.5mm, not supplied) to:
- the socket on the unit ;
- the headphone socket on an external device.

3 Play the external device (see the device's user manual).

Note

- The AUDIO-IN socket is not for headphones.

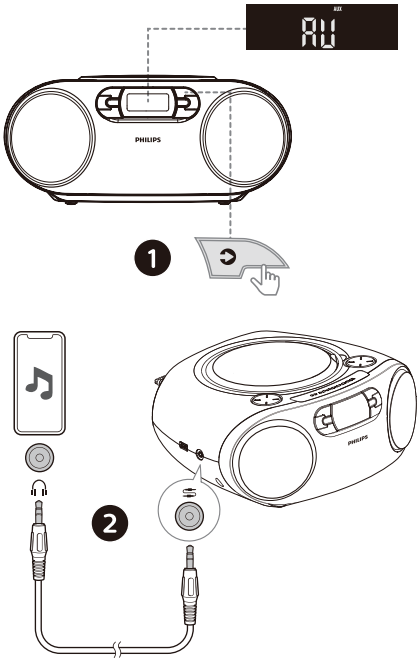

9 Other features

Set the sleep timer

This CD soundmachine can switch to standby automatically after a set period of time.

- When the CD soundmachine is turned on, press the **SLEEP** button repeatedly to select minutes (OFF/15/30/60/90/120).
  ↳ When sleep timer is activated, the SLEEP icon will be displayed.

To deactivate sleep timer

- Press **SLEEP** repeatedly until [**OFF**] (sleep off) is displayed.
  ↳ When sleep timer is deactivated, the **SLEEP** icon will disappear.

Factory reset

Reset device to default setting.

When the device is powered on, press and hold ▶II button for 5 seconds in **AUDIO IN** source at volume 2.

Once restored to factory default settings, the device will restart.

10 Product specification

Note

- Product information is subject to change without prior notice.

Bluetooth

Bluetooth profiles	A2DP, AVRCP
Bluetooth version	V 6.0
Bluetooth frequency range/Transmitter power (EIRP)	2402 ~ 2480MHz, < 9dBm

CD soundmachine

Power :	100-240V~, 50/60 Hz (AC Input)
Rated output power:	Total 3W (RMS)
Acoustic frequency response:	125Hz-20KHz
Speaker driver :	2 x 2.5" full range, 4Ω
Operation power consumption:	7 W
Standby power consumption:	< 0.5W (The display off) < 0.8W (The display on)
AUDIO IN input level:	500mV
Tuner frequency range:	FM 87.5-108MHz
Dimensions (W x H x D):	285 x125 x 245 mm (Main unit)
Weight:	1.15 kg (Main unit)

Supported audio formats

USB playback:	Type A, USB Direct 2.0, MSC file format, FAT16/32/exFAT

Disc

Laser Type:	semiconductor
Disc Diameter:	12cm/8cm
Support Disc:	CD-DA, CD-R, CD-RW
Audio DAC:	24Bits/44.1kHz
Total Harmonic Distortion:	< 1%
Frequency Response:	125Hz-20KHz
S/N Ratio	> 55 dBA

Battery life

- Playback of CD Approx. 11 hours
- Playback of BT Approx. 39 hours

Measured by Philips standards, Philips battery C LR14 1.5V, the actual battery life may vary depending on the circumstances of the unit or operating conditions.

USB play ability in formation

Extension	Codec	Sample Rate	Bitrate
.mp3	MP3	16~48 kHz	32~320 kbps
.wma	WMA	16~48 kHz	48~192 kbps
			64~161 kbps VBR
.flac	FLAC	16~48 kHz/16 Bit	
.wav	WAV	16~48 kHz	~1536 kbps

Compatible USB devices:

- USB flash memory (USB2.0)
- USB flash players (USB2.0)
- Memory cards (requires an additional card reader to work with this unit)

Supported USB formats:

- USB or memory fle format: FAT16, FAT32, exFAT (sector size: 512 bytes)
- MP3 bit rate (data rate): 32-320 kbps
- WMA bit rate (data rate): 48-192 kbps/64-161 kbps VBR
- WAV bit rate (data rate): Up to 1536 kbps
- Directory nesting up to a maximum of 8 levels
- Number of albums/folders: maximum 99
  Number of tracks/titles: maximum 999
  File name in Unicode UTF8 (maximum length: 32 bytes)

Unsupported USB formats:

- Empty albums: an empty album is an album that does not contain MP3 files, and will not be shown in the display.
- Unsupported file formats will be skipped. For example, Word files (. doc) or MP3 files with the extension dif will be ignored and will not be played.

11 Troubleshooting

Warning

- Never remove the casing of this device.

To keep the warranty valid, never try to repair the system yourself.
If you encounter problems when using this device, check the following points before requesting service. If the problem remains unsolved, go to the Philips Web page (www.philips.com/support). When you contact Philips, make sure that the device is nearby and the model number and serial number are availaple.

No power

- Make sure that the AC power cord of the device is connected properly.
- Make sure that there is power at the AC outlet.
- As a power-saving feature, the system switches off automatically 15 minutes after track play reaches the end and no control is operated.

No sound or poor sound

- Adjust the volume.
- Check that the speakers are connected correctly.
- Check if the stripped speaker wires are clamped.

No reponse from the unit

- Disconnect and reconnect the AC power plug, then turn on the unit again.
- As a power-saving feature, the system switches off automatically 15 minutes after track play reaches the end and no control is operated.

No disc detected

- Insert a disc.
- Check if the disc is inserted upside down.
- Wait until the moisture condensation at the lens has cleared.
- Replace or clean the disc.
- Use a finalized CD or correct format disc.

Cannot display some files in USB device

- The number of folders or files in the USB device has exceeded a certain limit. This phenomenon is not a malfunction.
- The formats of these files are not supported.

USB device not supported

- The USB device is incompatible with the unit. Try another one.

Poor radio reception

- Increase the distance between the unit and your TV or other radiation sources.
- Fully extend the radio antenna.
- Connect an outdoor radio antenna. You may purchase a replacement antenna cable with a L-shape plug on one end.
- Connect the L-shape plug to this product, and fit the plug on the other end into your wall socket.

Music playback is unavailable on this unit even after successful Bluetooth connection.

- The device cannot be used to play music through this unit wirelessly.

The audio quality is poor after connection with a Bluetooth -enabled device.

- The Bluetooth reception is poor. Move the device closer to this unit or remove any obstacle between them.

Bluetooth cannot be connected with this unit.

- The device does not support the profiles required for this unit.
- The Bluetooth function of the device is not enabled. Refer to the user manual of the device to find out how to enable the function.
- This unit is not in pairing mode.
- This unit is already connected with another Bluetooth-enabled device. Disconnect that device and then try again.

The paired mobile device connects and disconnects constantly.

- The Bluetooth reception is poor. Move the device closer to this unit or remove any obstacle between them.
- Some mobile phones may connect and disconnect constantly when you make or end calls. This does not indicate any malfunction of this unit.

Specifications are subject to change without notice.
2026© Philips and the Philips Shield Emblem are registered trademarks of Koninklijke Philips N.V. and are used under license. This product has been manufactured by and is sold under the responsibility of MMD Hong Kong Holding Limited or one of its affiliates, and MMD Hong Kong Holding Limited is the warrantor in relation to this product.

TAZ2000B, TAZ2000S _10_UM_V1.0